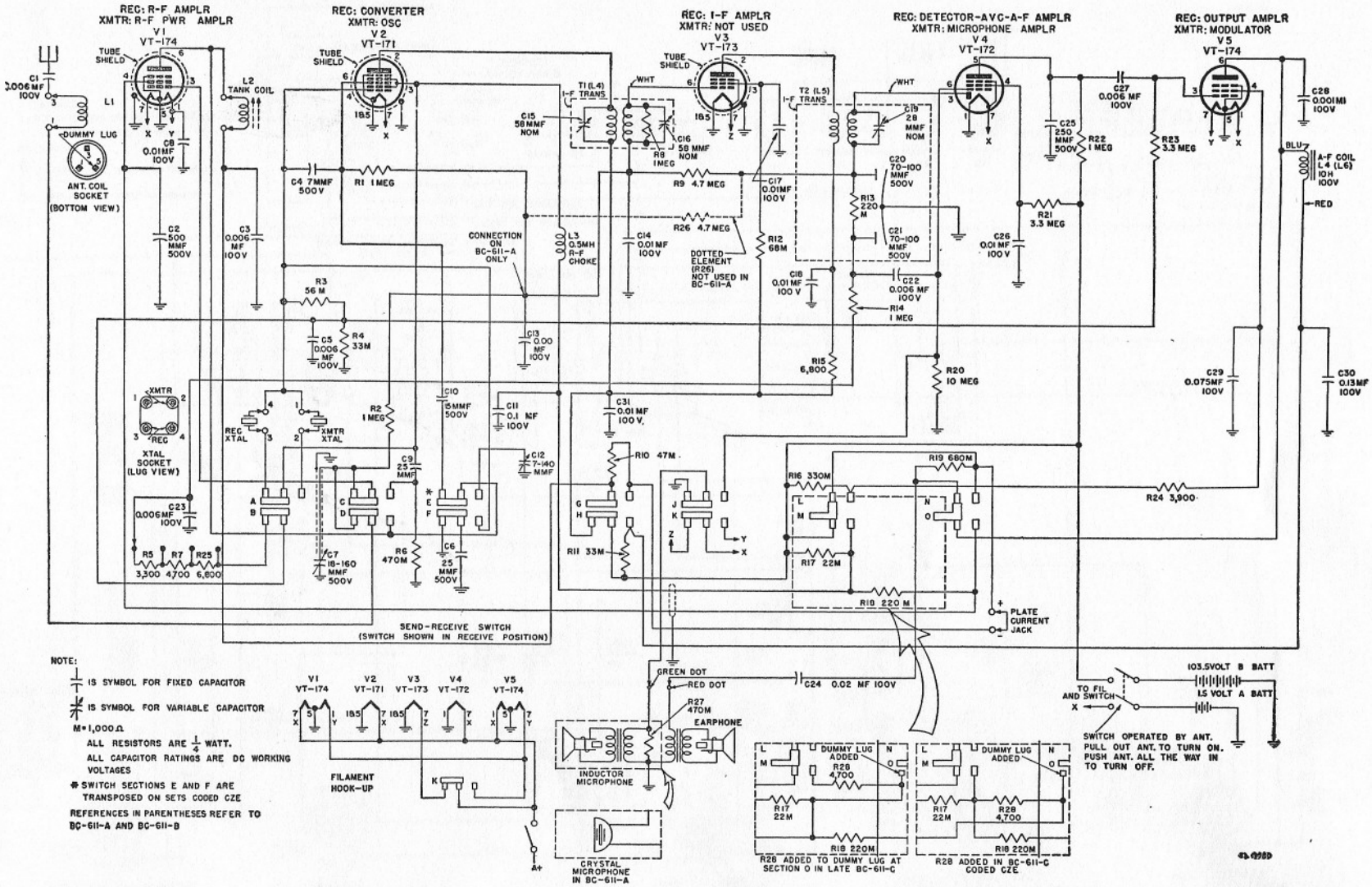

Figure 54. Radio Sets SCR-536-A through -E, complete schematic diagram.